CONTEMPORARY EXTENDED REACH PLP PULLDOWN FAUCET / 2PC. SUITE

5700-2

- MAX COUNTER THICKNESS 2-3/8"
- MINIMUM INSTALL HOLE SIZE 1-1/2"

A. Spray Connection with 3/8" Compression Fitting

B. Supply Hoses - 20" Long with 3/8" Compression Fittings

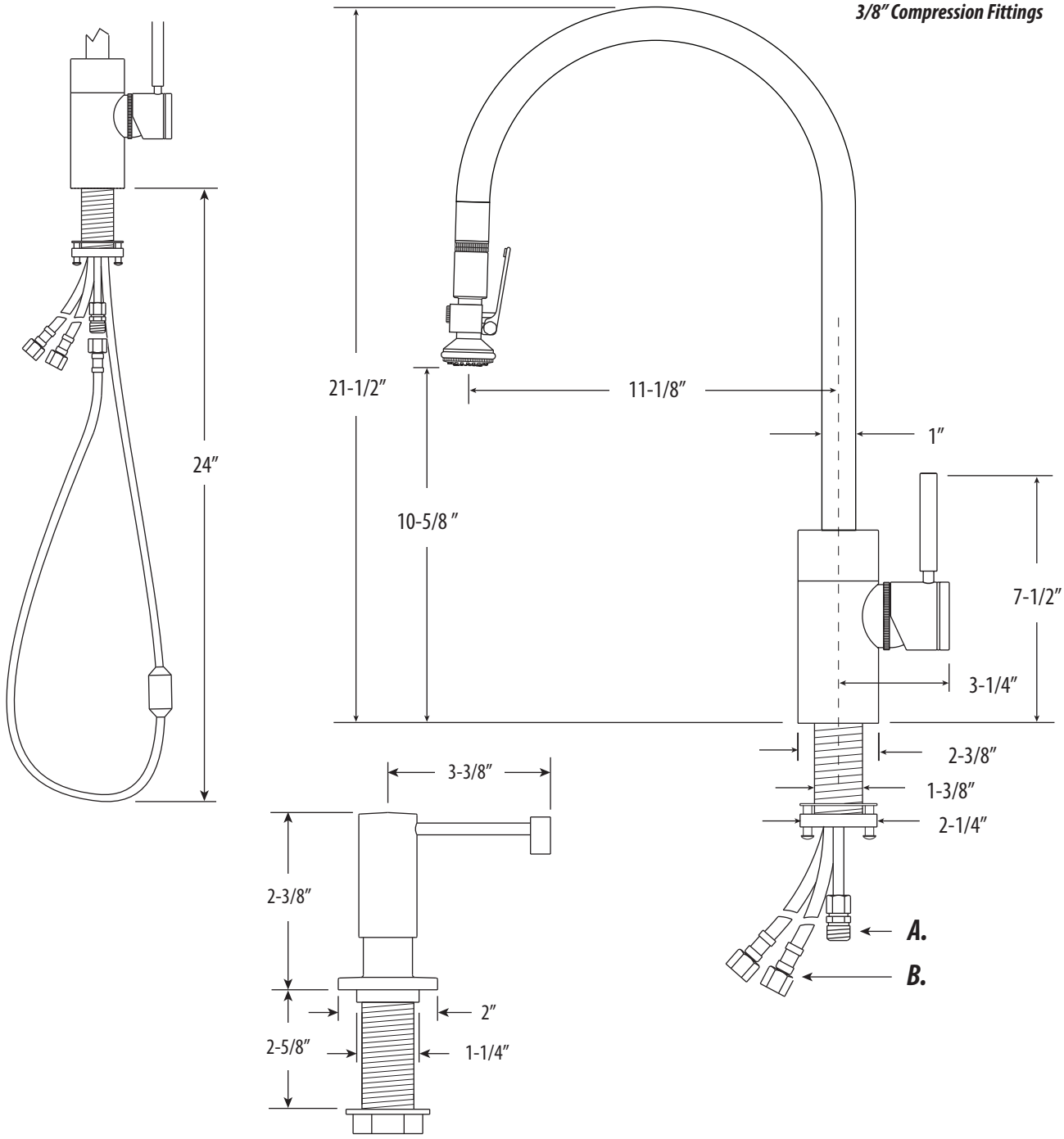

DIMENSIONS MAY VARY AND ARE SUBJECT TO CHANGE. NO RESPONSIBILITY IS ASSUMED FOR USE OF SUPERCEDED OR VOIDED DATA