KS2951,8DL
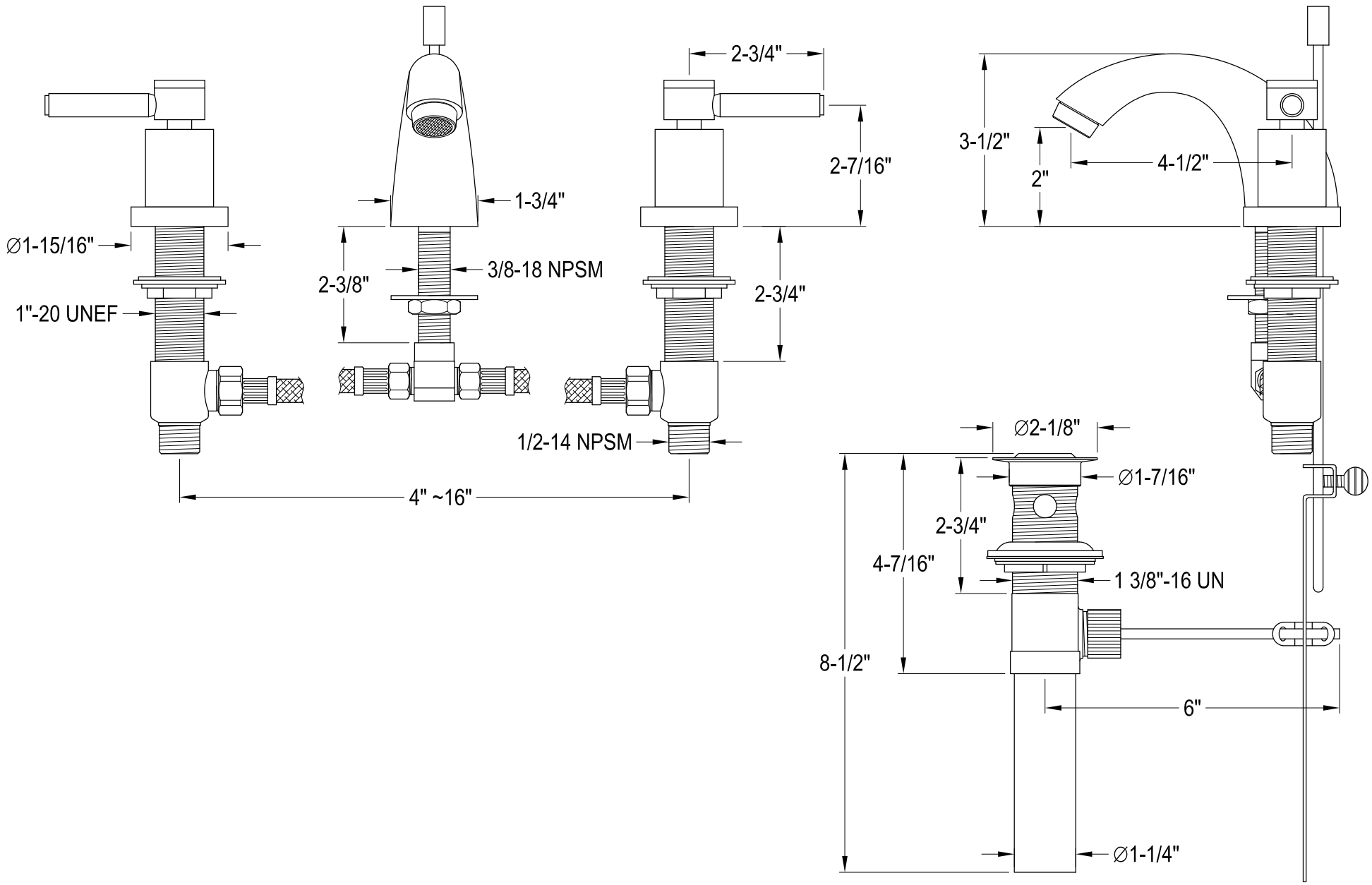
Mini Widespread Lavatory Faucet with Brass Pop-Up