VTSQ673018A1,2,5,6,8

67" Acrylic Clawfoot Tub

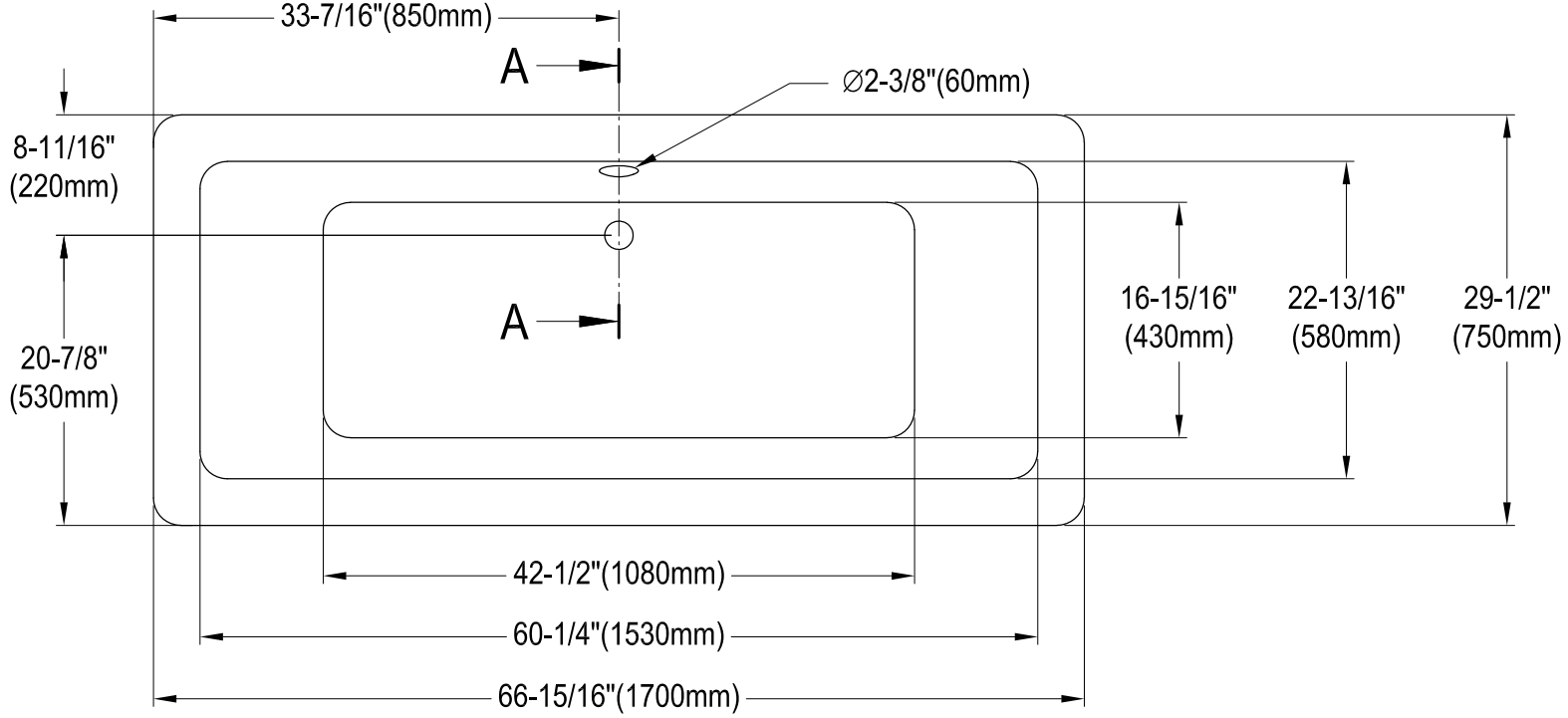

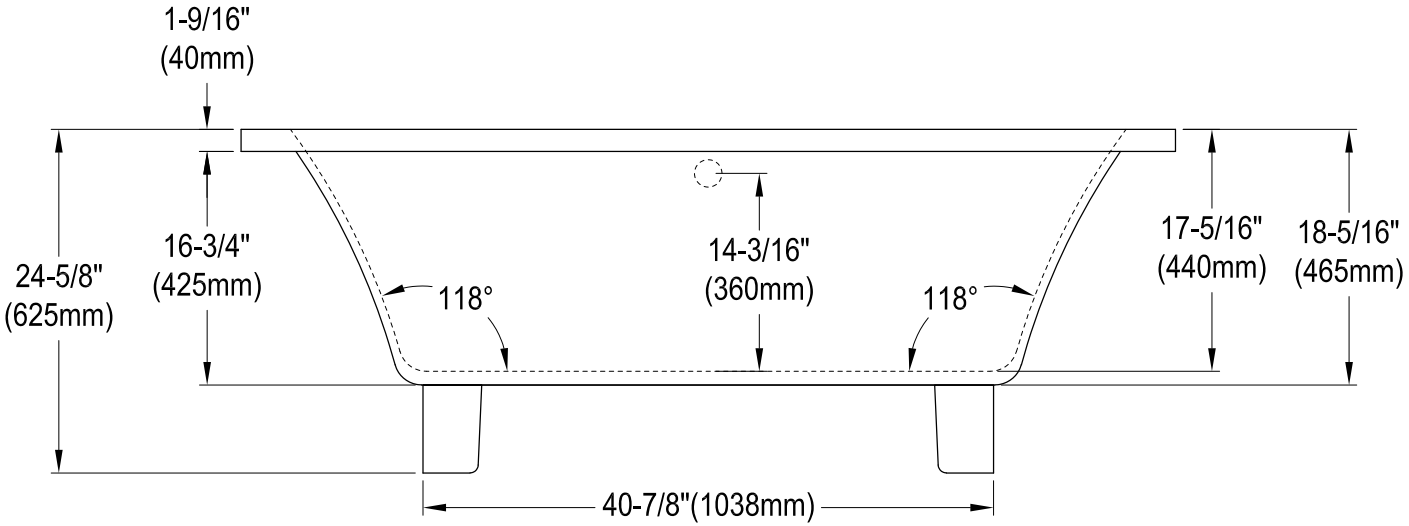

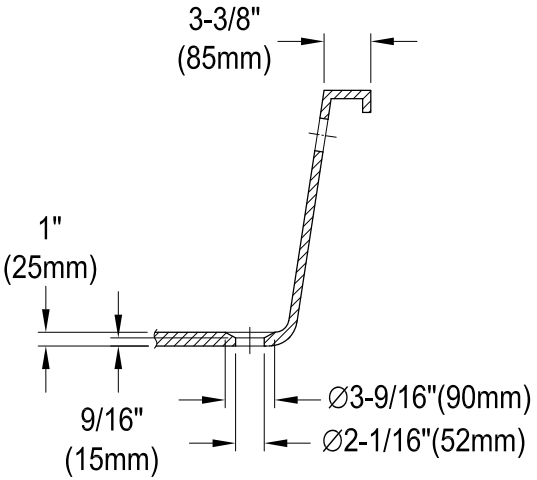

Section A-A