KS3030,1,2,5,7,8BPL
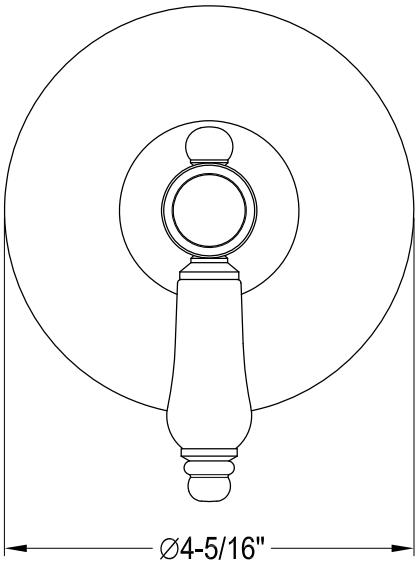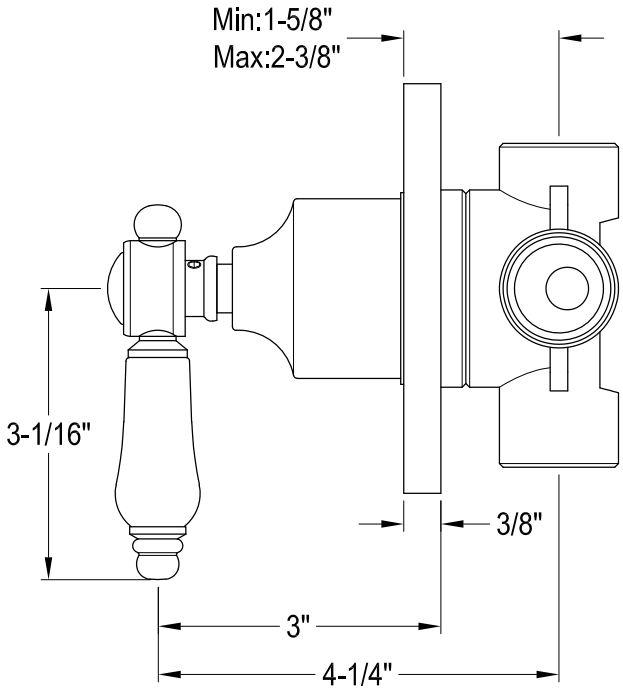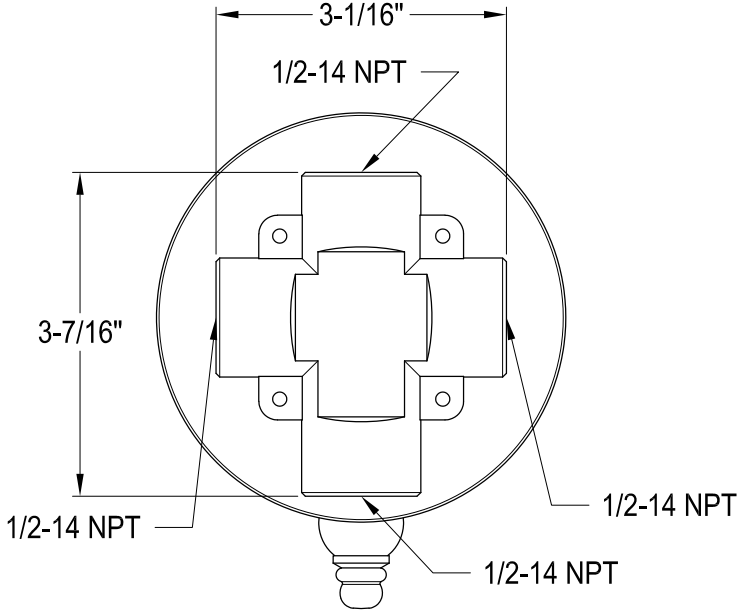
Three-Way Diverter Valve With Single Handle & Round Plate