KS1491,2,5,8BEX
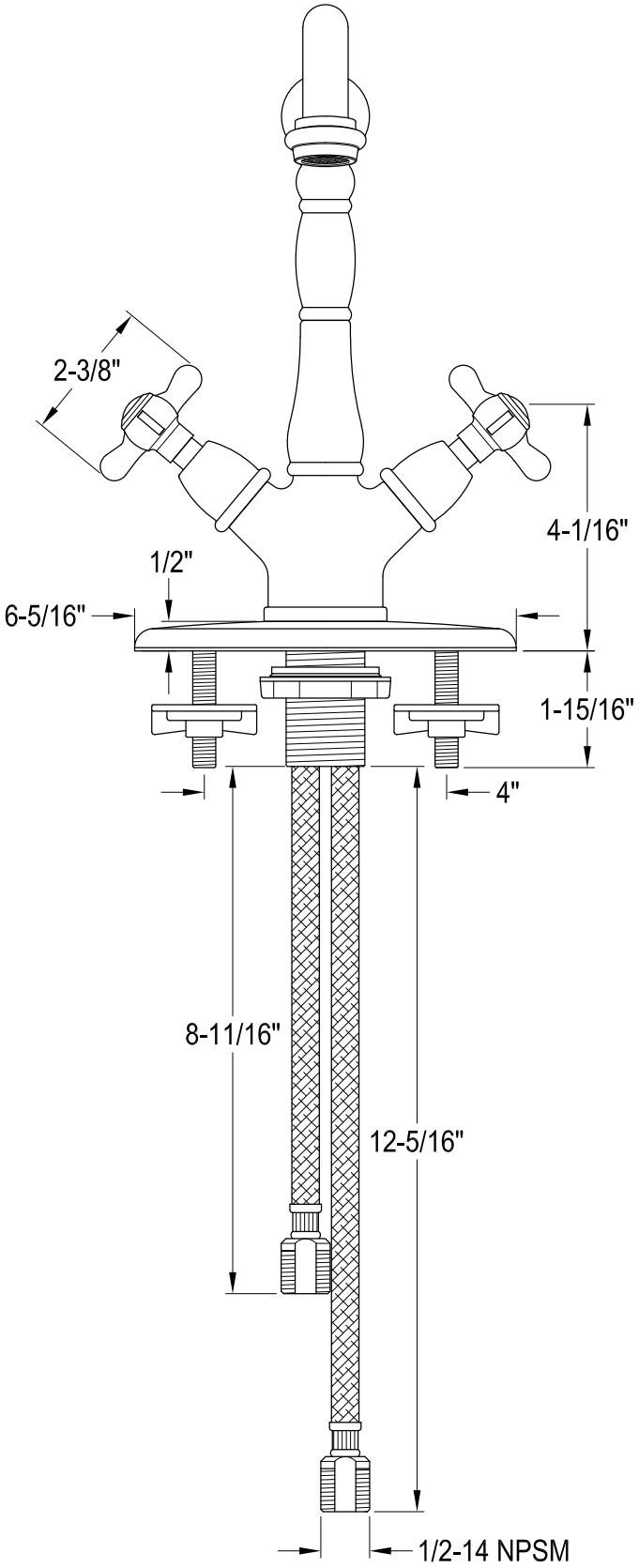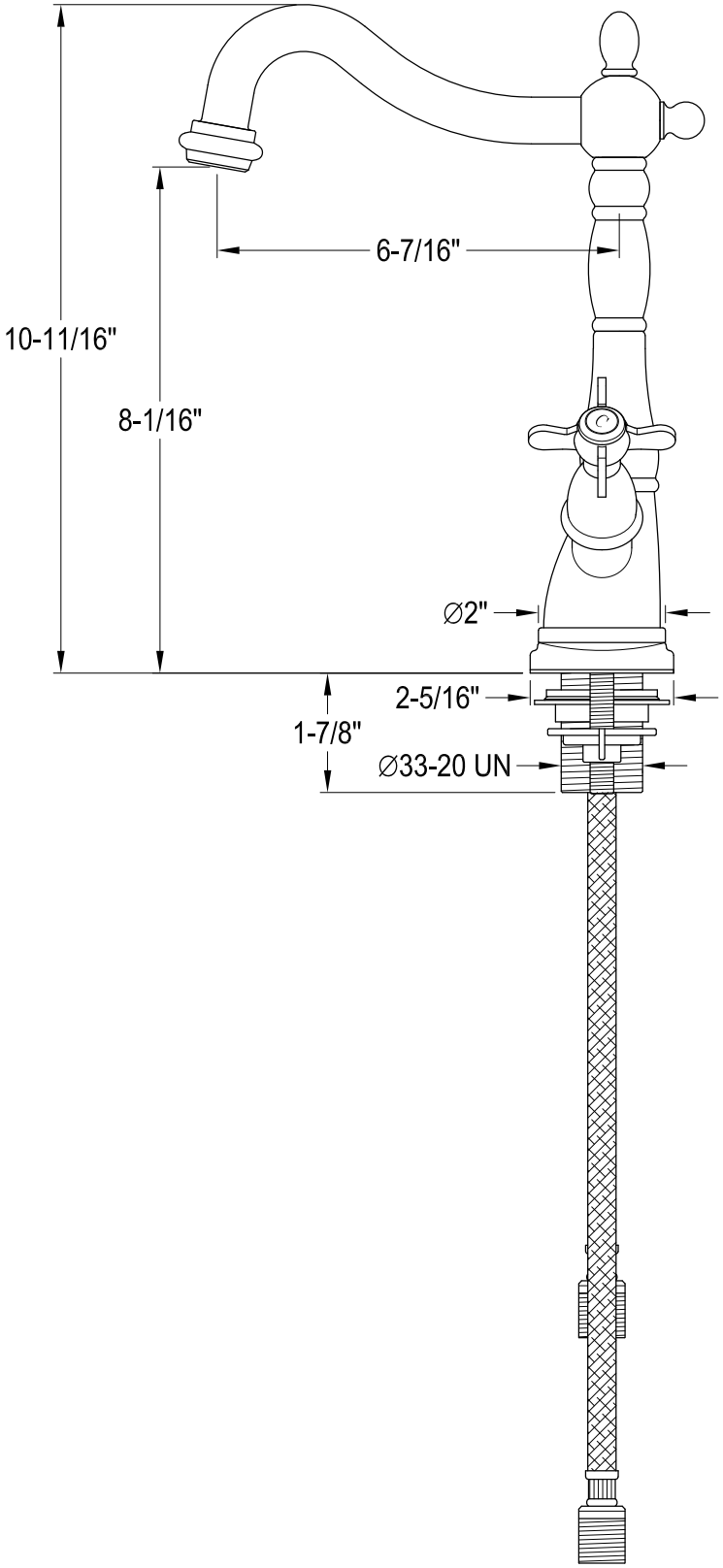
Twin Handles Vessel Sink Faucet