KS7990,1,2,3,5,7,8BEX

Twin Handles Lavatory Bridge Faucet with Brass Pop-Up

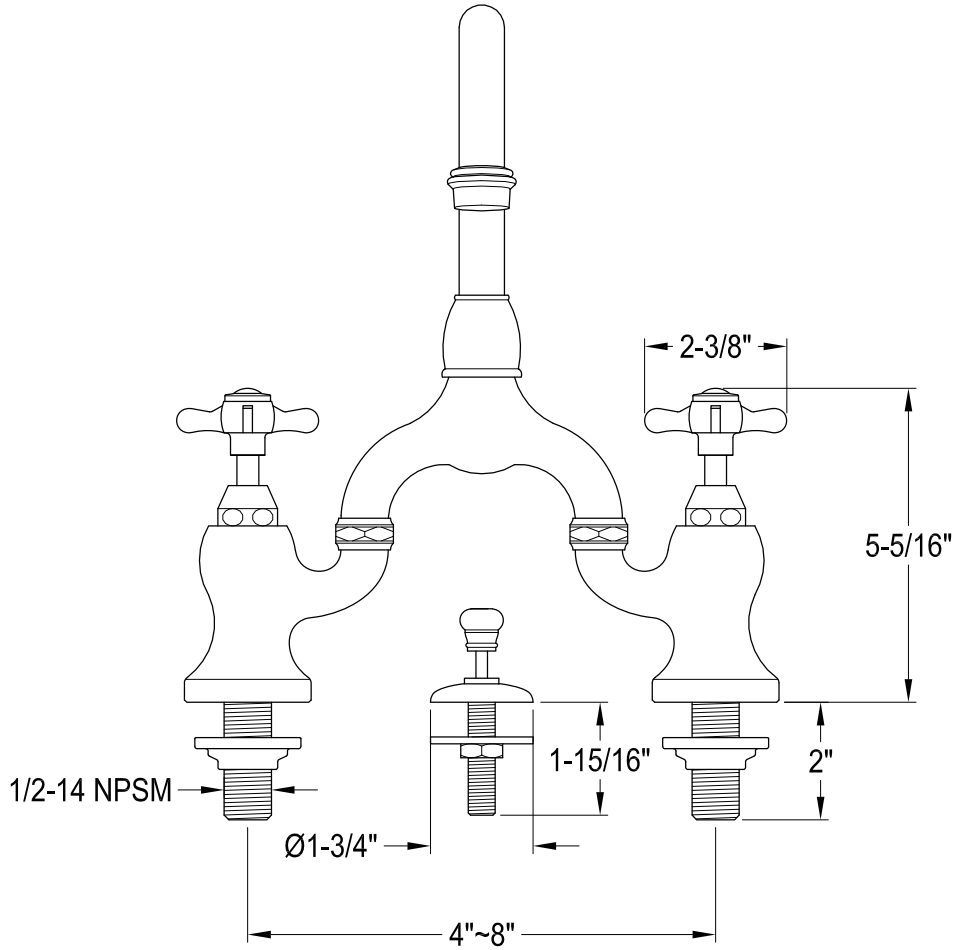

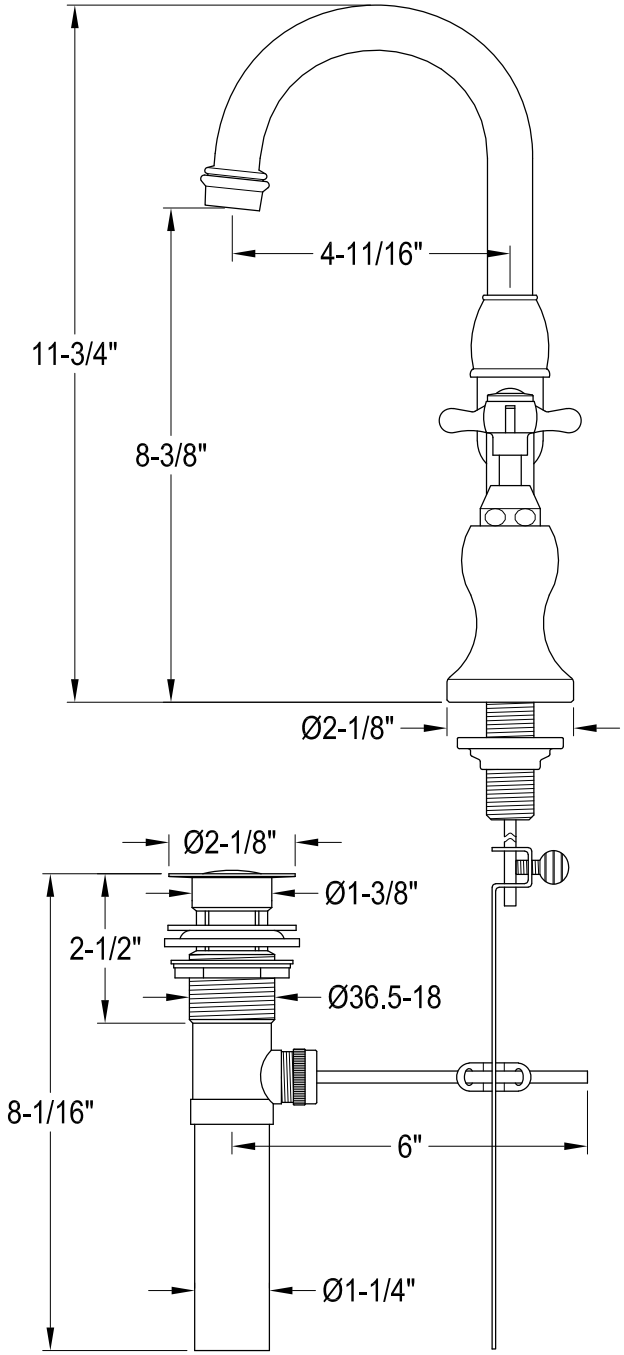

Ref# KS7990,1,2,3,5,7,8BEX | 2021-08-A