KB951,2,5,8ALL
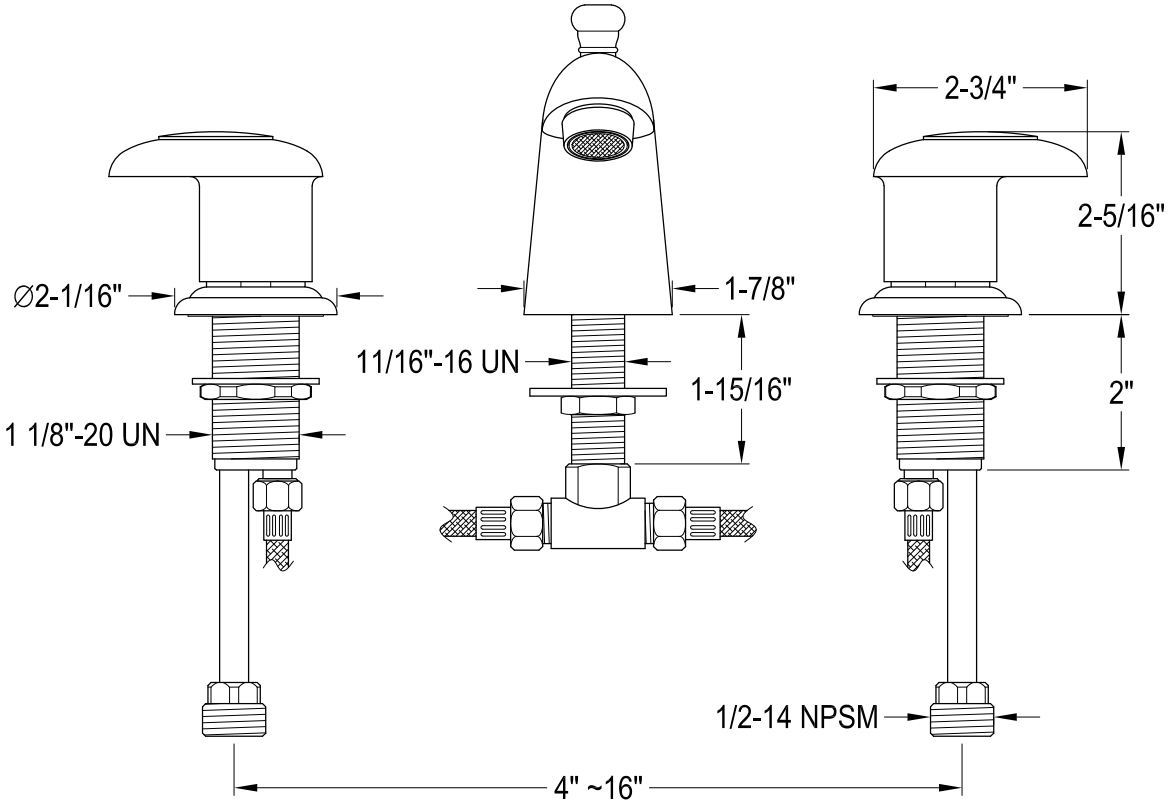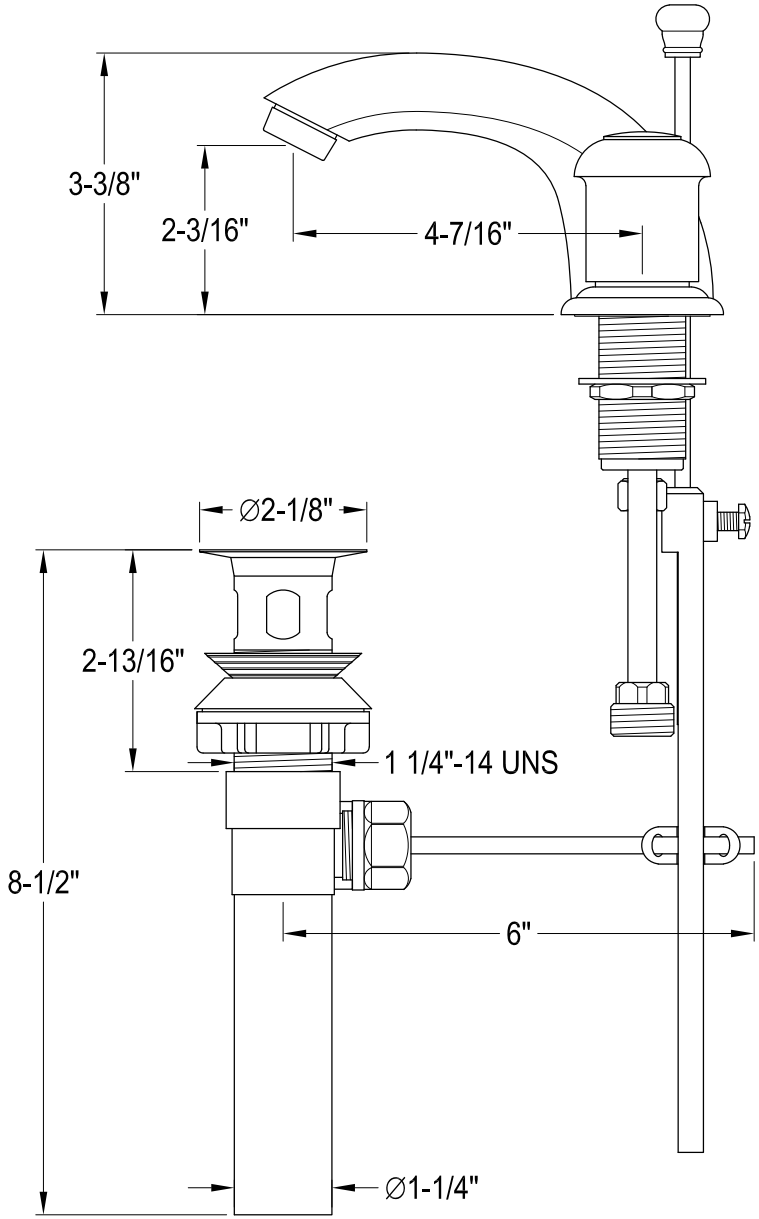
Mini Widespread Lavatory Faucet with Retail Pop-Up