HS8006 - Wall Elbow With Holder Installation

**Installation Manual**

isenberg
innovation+design

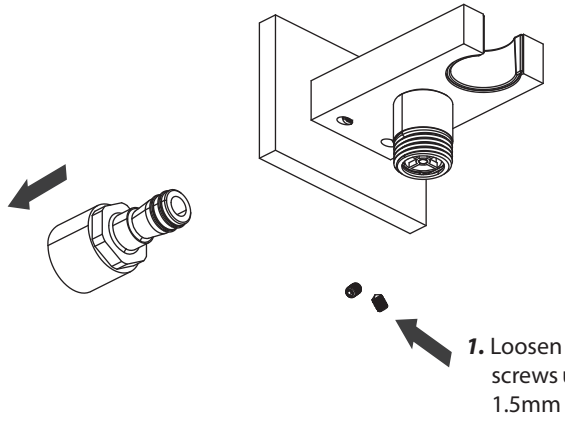


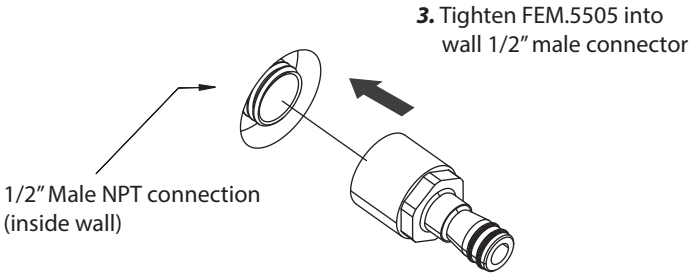


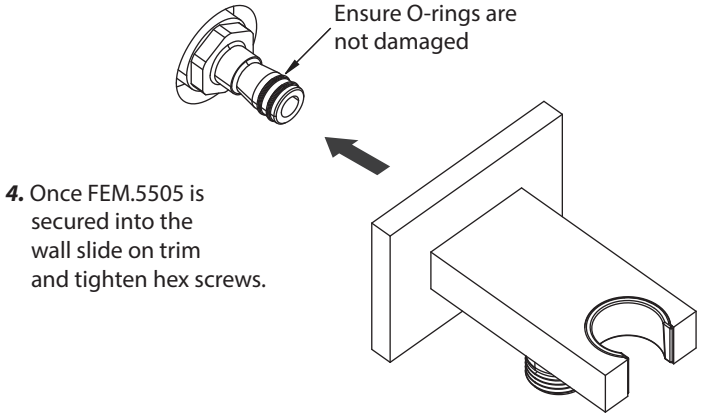


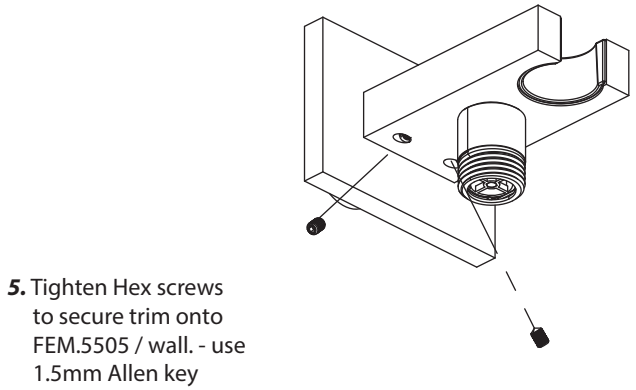


Ver 2.53